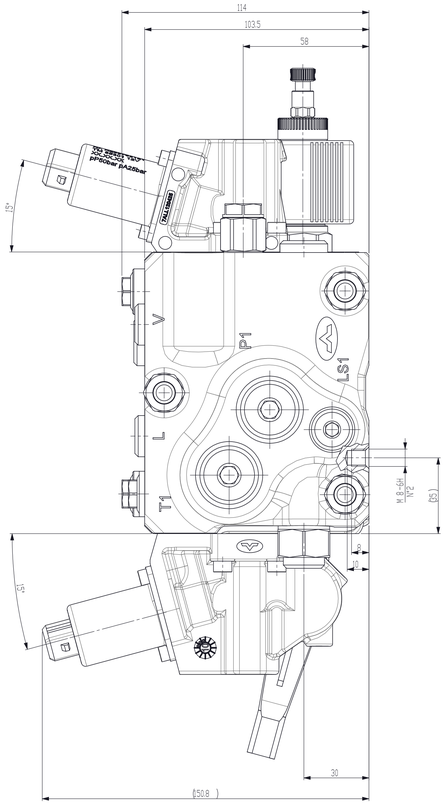

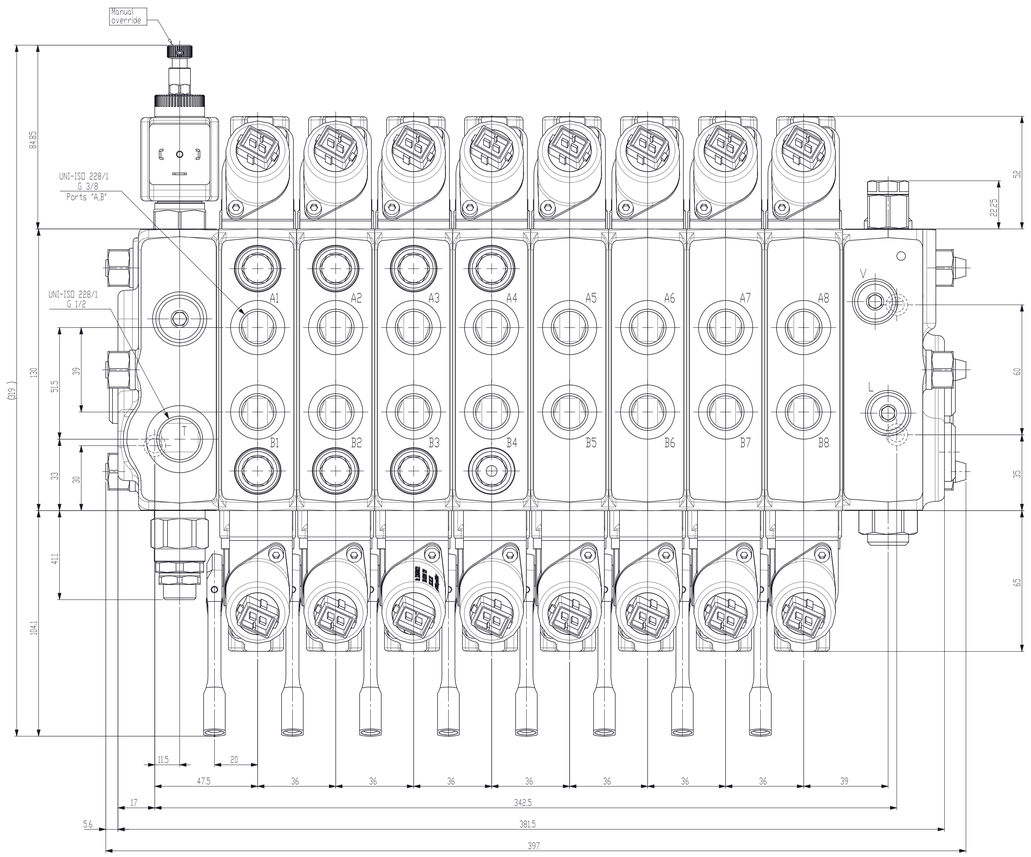

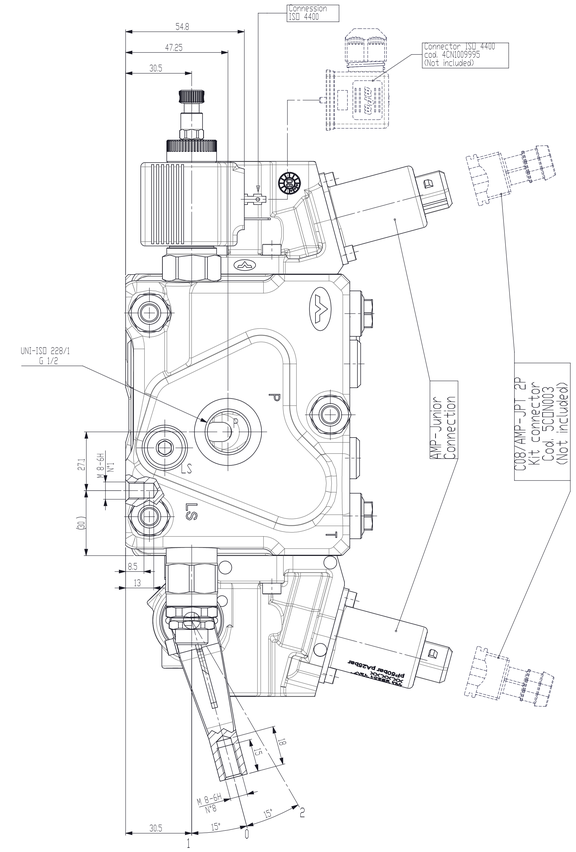

Isometric view
Scale 1:2

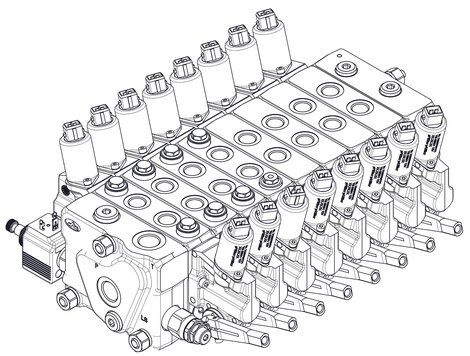

HYDRAULIC CIRCUIT

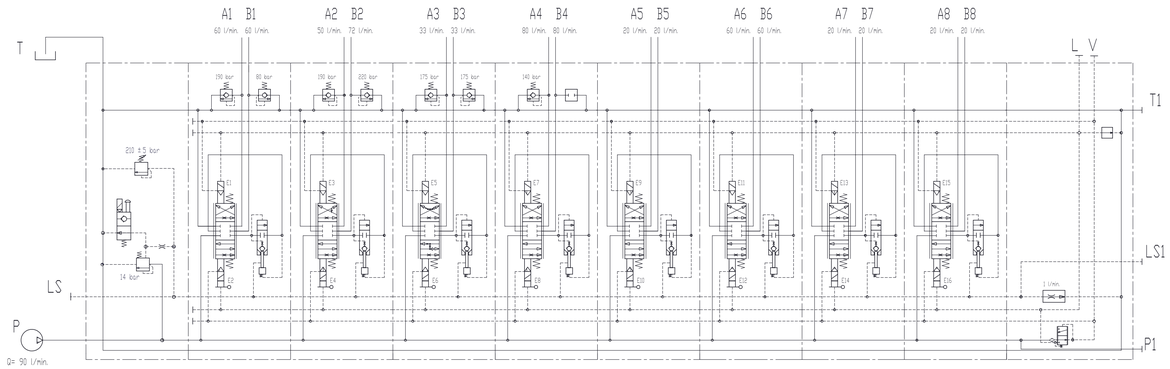

WORKING CONDITIONS

Max. work port flow	: 90 l/min
Max. inlet flow	: 120 l/min
Max. pressure P	: 300 bar
Max. pressure A,B	: 300 bar
Max. backpressure	: 10 bar
Stand-by pressure	: 14 bar
Fluid	: Mineral based oil
Viscosity range	: **12 to 400 mm²/s**
Seal material	: NBR
Temperature range of the fluid	: -30°C to +80°C
Environmental temperature	: -30°C to +50°C
Max. level of contamination of the fluid	: 18/15 ISO-4406
Internal leakage (A4,A5,B5,A6,B6,A7, B7,A8,B8)	: **9 cm³/min to 100 bar, 40°C and 46 mm²/s**
Internal leakage (A1,B1,A2,B2,A3, B3,A4)	: **14 cm³/min to 100 bar, 40°C and 46 mm²/s**

ELECTRICAL CHARACTERISTICS (ELP)

Nominal voltage	: 12 VDC
Nominal power	: 19 W
Nominal current	: 1.6 A
Resistence	: 7.5 Ohm ± 7%
Duty	: ED 100%

ELECTRICAL CHARACTERISTICS (8EB3)

Nominal voltage	: 12 VDC
Nominal current	: 1.5 A
Resistence	: 4.72 Ohm ± 5%

@ DPX100/8/AMI(TGFV4-210\ELP)/
PE-E108(60\60)-8EB3TLHUU(175-T190U2(80)/
PE-E108(50\72)-8EB3TLHUU(60-T190U2(220)/
PE-EVP3D144(LHO(33\33)-8EB3TDLHUU(175)/
PE-E101\(80)-8EB3TLHUU(110-T140U2T)/
DE-E108(20\20)-8EB3TLH/
DE-E108(60\60)-8EB3TLH/
DE-E106(20\20)-8EB3TLH/
DE-E106(20\20)-8EB3TLH/
RDR(03)-12VDC-<Q90-CVN>

Descrizione ultima revisione - Last edition description		Scala / Scale 1:1	A0-SV
		Famiglia / Group	Disegno prototipo / Prototype
		Descrizione - Description	
walvoll	Sostituisce / Substitute		
	Riferimento Tecnico / Technical Reference: Manicardi		
http://www.walvoll.com e-mail: info@walvoll.com REGGIO EMILIA - ITALY	Disegnatore / Draw: Attolini R. 18/03/2019	Codice / Code: 111A80077	I.R. / Rev.: 1
	All rights reserved		